FORMULAIC LANGUAGE IN ADVERTISING: A MULTI-GROUP SEM ANALYSIS OF CHINESE IDIOMS AND COLLOQUIAL EXPRESSIONS

Aphatsara Thirakuntham[1] and Zheyun Zheng[2,*]

(**Received:** 17 Apr., 2026; **Revised:** 3 Jul., 2026; **Accepted:** 7 Jul., 2026)

Abstract

This study examines the effects of formulaic language on advertising effectiveness by investigating the relationships among perceived message clarity, perceived value, emotional response, and attitude toward the advertisement, and by comparing these relationships across advertisements featuring Chinese idiomatic and colloquial expressions. Data were collected from 500 Chinese university students after they were exposed to study-abroad advertisements featuring either Chinese idiomatic or colloquial expressions. The responses were analyzed using structural equation modeling (SME) and multi-group analysis. The results indicate that perceived message clarity significantly influences both perceived value and emotional response, which, in turn, affect attitude toward the advertisement in the overall sample. However, notable differences emerge between the two language conditions. In the idiomatic expression group, attitude toward the advertisement is primarily influenced by perceived message clarity and emotional response, whereas perceived value does not play a significant role. In contrast, in the colloquial expression group, perceived value serves as a key mediator, significantly influencing both emotional response and attitude toward the advertisement. These findings indicate that Chinese idiomatic expressions primarily enhance attitude toward the advertisement through message clarity and emotional response, whereas colloquial expressions exert their influence mainly through perceived value, demonstrating distinct cognitive and affective processing pathways in advertising contexts.

Keywords: Formulaic Language, Chinese Idioms, Advertising Attitude

[1] Lecturer, Thai-Chinese International School of Management, University of The Thai Chamber of Commerce, Bangkok, Thailand

[2] Assistant Professor, Thai-Chinese International School of Management, University of The Thai Chamber of Commerce, Bangkok, Thailand

* Corresponding author. E-mail: zheng_zhe@utcc.ac.th

Introduction

In contemporary communication environments, advertising effectiveness increasingly depends not only on the content of the message but also on the way the message is linguistically presented. With the rapid development of digital media and information overload, consumers are exposed to a large volume of advertising messages on a daily basis, making it more challenging for advertisements to capture attention and generate meaningful responses. Under such conditions, the clarity of information, perceived value, and emotional engagement have been identified as key determinants of advertising effectiveness (Chen et al, 2023; Liu et al, 2024). At the same time, recent studies have highlighted that language style plays a critical role in shaping how audiences process and evaluate advertising messages, influencing both cognitive and affective responses (Sattorov, 2024). However, while existing research has primarily focused on factors such as message framing, visual design, and interactivity, relatively less attention has been paid to the role of formulaic language, particularly in non-Western linguistic contexts.

Formulaic language, including idiomatic expressions (Chenyu) and colloquial expressions (Guanyongyu), represent an essential component of natural language use. In the Chinese linguistic and cultural context, idiomatic expressions are highly condensed and culturally loaded forms of language that often carry historical and symbolic meanings, whereas colloquial expressions are more flexible, conversational, and grounded in everyday communication. These two types of expressions differ not only in structure and semantic transparency but also in cognitive processing and cultural resonance. Idiomatic expressions typically require holistic processing and cultural knowledge, while colloquial expressions are more easily understood and processed through straightforward interpretation (Sun et al, 2026). Such differences suggest that distinct types of formulaic language may activate different psychological mechanisms in advertising contexts. Nevertheless, empirical research examining how these linguistic differences influence consumer perception and evaluation remain limited, particularly in terms of comparing their effects within a unified structural framework.

To address this gap, the present study examines the relationships among perceived message clarity, perceived value, emotional response, and advertisement attitude, and further investigates how these relationships differ across two types of formulaic language, namely Chinese idiomatic expressions (Chengyu) and Chinese colloquial expressions

(Guanyongyu). Although previous studies have demonstrated that language style influences advertising effectiveness, limited empirical research has compared how different types of Chinese formulaic language shape consumers' cognitive and affective responses within a unified structural framework. Using a controlled experimental design with advertising stimuli, this study employs structural equation modeling and multi-group analysis to explore both the overall mechanism and the group-specific differences in the proposed model. By focusing on language style as the key independent variable, the study aims to provide a more nuanced understanding of how linguistic features influence the cognitive and affective processing of advertising messages. Furthermore, this study contributes to the advertising literature by providing empirical evidence on the distinct psychological mechanisms through which Chinese idiomatic and colloquial expressions influence advertisement evaluation. Therefore, the research objectives of this study are proposed as follows:

To compare whether the structural relationships among these constructs differ between advertisements using Chinese idiomatic expressions (Chengyu) and Chinese colloquial expressions (Guanyongyu).

Table 1 Comparison between Chinese Idioms and Colloquial Expressions

Dimension	Chinese Idioms	Chinese Colloquial Expressions
Structure	Highly fixed expressions, typically consisting of four characters	Relatively fixed expressions with variable lengths, usually consisting of two or more characters
Semantic Transparency	Generally low semantic transparency; meanings are often not directly inferable from the literal meanings of individual words	Moderate semantic transparency; meanings are more closely related to the literal meanings and everyday usage
Language Style	Formal, literary, and concise; commonly used in written and rhetorical contexts	Informal, conversational, and vivid; commonly used in everyday spoken language
Cultural Characteristics	Rich in historical allusions, classical literature, and traditional Chinese cultural values	Reflect everyday life, folk wisdom, and common social experiences, with relatively fewer historical references
Cultural Load	High cultural load requiring familiarity with Chinese history and traditional culture	Moderate cultural load, mainly reflecting contemporary social and cultural experiences
Cognitive Processing	Requires holistic processing and background cultural knowledge to understand figurative meanings	Relies more on compositional processing, contextual cues, and familiar everyday experiences
Comprehension Difficulty	Relatively difficult, especially for unfamiliar or culturally specific expressions	Relatively easier to understand because of higher familiarity and contextual transparency
Emotional Response	More likely to evoke appreciation, cultural resonance, and aesthetic evaluation	More likely to evoke familiarity, intimacy, and immediate emotional engagement

Methods and Materials

1. Research Sample The population of this study consists of Chinese university students who are potential recipients of advertising messages. This population was selected because university students represent a relevant and accessible group for examining how different types of formulaic language influence cognitive and affective responses to advertising. In this study, study-abroad promotional materials were used as experimental stimuli, as study-abroad decisions typically involve substantial information processing and emotional evaluation, making them an appropriate context for examining the influence of language style on advertising effectiveness.

Due to practical considerations, a sample was drawn from the target population using a convenience sampling approach. Participants completed one of two questionnaire versions, each containing a different set of advertisement stimuli. One questionnaire featured advertisements using Chinese idiomatic expressions, whereas the other featured advertisements using Chinese colloquial expressions. A total of 252 valid responses were obtained for the Chinese idiomatic expression version and 248 for the Chinese colloquial expression version. The two groups were comparable in size, supporting subsequent multi-group structural equation modeling analysis.

The demographic characteristics of the sample and the distribution across experimental groups are described as follows. In terms of gender, 282 respondents were male, accounting for 56.4% of the sample, while 218 respondents were female, representing 43.6%. Regarding academic level, 226 respondents were classified as lower-grade students (45.2%), whereas 274 respondents were upper-grade students (54.8%). With respect to academic major, 240 respondents were from humanities and social sciences disciplines (48.0%), and 260 respondents were from science and engineering fields (52.0%). In terms of regional distribution, 160 respondents were from eastern regions (32.0%), 193 from central regions (38.6%), and 147 from western regions (29.4%), indicating a relatively balanced geographical representation..

2. Research Instruments This study employed a structured questionnaire as the primary instrument for data collection, aiming to assess respondents' perceptions and evaluations after exposure to advertising materials featuring different types of formulaic language, namely Chinese idioms and colloquial expressions.



Figure 1 Example of Advertisement Stimulus Featuring Chinese Idiomatic Expression

(Note: Developed by the author)



Figure 2 Example of Advertisement Stimulus Featuring Colloquial Expression

(Note: Developed by the author)

To enhance the robustness of the experimental stimuli and reduce potential bias associated with a single advertisement, four pairs of advertising posters were developed. Each pair consisted of two versions of the same advertisement, with one version using Chinese idiomatic expressions and the other using colloquial expressions (Figure 1 & Figure 2). The Chinese idiomatic and colloquial expressions included in the advertisements were selected based on their frequent use in educational and study-abroad promotional contexts

to ensure authenticity and familiarity for the target participants. To ensure comparability, each pair of advertisements conveyed the same informational content and communication objective while differing only in the linguistic style employed. The content, layout, images, and informational elements of each pair were kept identical, with only the linguistic expressions systematically manipulated. Accordingly, language style served as the only experimental variable, whereas all other visual and informational elements were controlled across the two conditions. All respondents were exposed to the set of advertisement stimuli at the beginning of the questionnaire before proceeding to the measurement items. Each participant completed only one version of the questionnaire, containing either Chinese idiomatic-expression advertisements or Chinese colloquial-expression advertisements, to avoid potential carryover effects between the two language conditions. The order of the four advertisement pairs was kept identical for all participants within each questionnaire version to ensure standardized exposure throughout the experiment.

All measurement items were adapted from well-established scales that have been widely used and validated in prior research. Minor wording modifications were made to ensure consistency with the advertising context of this study. All items were measured using a seven-point Likert scale ranging from 1 (strongly disagree) to 7 (strongly agree), with higher scores indicating stronger agreement.

Perceived message clarity refers to the extent to which the advertising message is easy to understand and cognitively accessible. This construct was measured using a four-item scale adapted from the framework proposed by Sundar (2008). The measurement focuses on respondents' ability to comprehend the content of the advertisement, including the clarity, understandability, and presentation of information; Perceived value reflects the extent to which respondents evaluate the advertised program as useful and beneficial. This construct was measured using four items adapted from the performance expectancy dimension of the Unified Theory of Acceptance and Use of Technology (UTAUT) developed by Venkatesh et al (2003). The items capture respondents' perceptions of the utility, benefits, and overall value of the program presented in the advertisement; Emotional response represents the affective reactions elicited by the advertisement. This construct was operationalized using the hedonic value dimension of the scale developed by Babin et al (1994), which has continued to be widely applied in consumer behavior research. In this study, four items were used to measure the extent to which the advertisement is perceived

as enjoyable, interesting, and capable of generating positive emotional experiences; Advertisement attitude refers to respondents' overall evaluative judgment of the advertising content. This construct was measured using a four-item scale adapted from the model developed by MacKenzie et al (1986), which remains one of the most widely used measures in advertising research. The scale captures the degree to which respondents hold favorable, positive, and appealing attitudes toward the advertisement.

Manipulation check items were included to verify whether respondents correctly perceived the intended differences in language style between the two versions of the advertisement. These items assessed whether the advertisement was perceived as using formal, culturally loaded expressions or natural, conversational language, thereby confirming the effectiveness of the distinction between Chinese idioms and colloquial expressions.

3. Data Analysis The data analysis was conducted using SPSS and AMOS to examine the measurement properties and structural relationships of the proposed model. Descriptive statistics were first used to assess data distribution and normality. Reliability analysis and exploratory factor analysis were then performed to evaluate internal consistency and construct validity. Confirmatory factor analysis was subsequently conducted to validate the measurement model, with model fit assessed using multiple fit indices, and composite reliability and average variance extracted used to examine convergent validity. Pearson correlation analysis was applied to explore relationships among the variables. Structural equation modeling was then conducted for both the full sample and subgroup samples. Multi-group analysis was further performed to compare structural relationships across different types of formulaic language, with measurement invariance tested using nested models and changes in fit indices.

Results

Descriptive statistical analysis (Table 2) was conducted for the four constructs, perceived message clarity, perceived value, emotional response, and advertisement attitude (N = 500). The mean scores ranged from 2.96 to 3.04, slightly below the midpoint of the seven-point Likert scale (4.0), suggesting relatively modest evaluations of the advertisement stimuli. The skewness and kurtosis values were within acceptable ranges, indicating that the data satisfied the assumption of normality.

The reliability analysis results indicate that all four constructs demonstrate satisfactory internal consistency. Specifically, the Cronbach's alpha coefficients for perceived message clarity, perceived value, emotional response, and advertisement attitude are 0.814, 0.804, 0.841, and 0.833, respectively. All values exceed the recommended threshold of 0.70, suggesting that the measurement scales are reliable and the data are internally consistent.

Table 2 Descriptive Statistics of Key Variables

Construct	Mean	Std.Dev.	Skewness	Kurtosis
Perceived message clarity	2.99	1.13361	0.048	-1.065
Perceived value	3.04	1.12351	0.026	-1.002
Emotional response	3.01	1.16521	0.043	-1.163
Advertisement attitude	2.96	1.15539	-0.009	-1.097

Regarding construct validity, the results of the Kaiser–Meyer–Olkin (KMO) and Bartlett's test of sphericity confirm the suitability of the data for factor analysis. The KMO value of 0.883 exceeds the recommended threshold of 0.70, indicating adequate sampling adequacy, while Bartlett's test is statistically significant ($\chi^2 = 3120.352$, df = 120, $p < 0.001$), suggesting that the correlation matrix is appropriate for factor extraction.

The exploratory factor analysis further supports the validity of the measurement model. Four factors with eigenvalues greater than 1 were extracted, explaining a total variance of 65.747%, which exceeds the commonly accepted threshold of 60%. After rotation, the variance explained by each factor is relatively balanced, indicating a stable factor structure. The factor loading results show that all measurement items load strongly on their respective constructs, with loadings exceeding 0.70. The communalities range from 0.586 to 0.688. These findings demonstrate good convergent validity and clear discriminant structure among the four constructs.

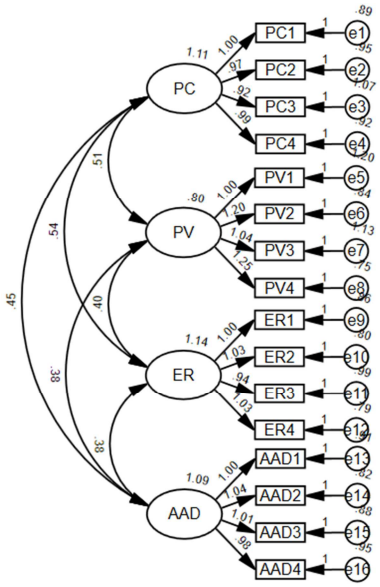

Figure 3 Result of CFA Analysis

The results of the confirmatory factor analysis indicate that the measurement model demonstrates an excellent overall fit. Specifically, the model fit indices show that χ^2/df = 0.920, RMSEA = 0.01, GFI = 0.978, NFI = 0.963, TLI = 0.999, and CFI = 0.999. All indices meet or exceed the recommended thresholds, with RMSEA well below 0.05 and GFI, NFI, TLI, and CFI all approaching or exceeding 0.95, indicating a very good model fit. In addition, the parsimony-adjusted indices, including PNFI (0.800) and PGFI (0.722), also fall within acceptable ranges, further supporting the adequacy of the model.

Table 3 Result of CFA Analysis

VAR	Items	Estimate	S.E.	C.R.	P	AVE	CR
Perceived Message clarity	PC1	0.746				0.523	0.814
	PC2	0.725	0.067	14.557	***		
	PC3	0.683	0.066	13.801	***		
	PC4	0.736	0.067	14.734	***		
Perceived value	PV1	0.633				0.510	0.805
	PV2	0.762	0.093	13.008	***		
	PV3	0.659	0.088	11.789	***		
	PV4	0.79	0.094	13.249	***		
Emotional response	ER1	0.756				0.572	0.842
	ER2	0.776	0.063	16.227	***		
	ER3	0.711	0.063	14.941	***		
	ER4	0.779	0.063	16.277	***		
Advertisement attitude	AAD1	0.738				0.556	0.833
	AAD2	0.769	0.068	15.398	***		
	AAD3	0.749	0.067	15.073	***		
	AAD4	0.725	0.067	14.653	***		

Regarding the measurement properties (Table 3), all factor loadings are statistically significant ($p < 0.001$) and fall within acceptable ranges. The factor loadings for perceived message clarity range from 0.683 to 0.746, for perceived value from 0.633 to 0.790, for emotional response from 0.711 to 0.779, and for advertisement attitude from 0.725 to 0.769. These results indicate that all items load adequately on their respective constructs. The composite reliability values for all constructs exceed the recommended threshold of 0.70, with values of 0.814 for perceived message clarity, values ranging from 0.805 to 0.842 for perceived value, 0.842 for emotional response, and 0.833 for advertisement attitude, indicating good internal consistency. The average variance extracted values are all close to or above the recommended threshold of 0.50, suggesting that the constructs explain a sufficient proportion of variance in their respective indicators.

Pearson correlation analysis results indicate that all variables are significantly and positively correlated with each other ($p < 0.01$). Specifically, perceived message clarity is positively correlated with perceived value ($r = 0.425$), emotional response ($r = 0.400$), and advertisement attitude ($r = 0.335$). Perceived value is positively correlated with emotional response ($r = 0.349$) and advertisement attitude ($r = 0.335$). Emotional response is positively correlated with advertisement attitude ($r = 0.286$).

Table 4 Correlation Analysis Results

VAR	PC	PV	ER	AAD
PC	1			
PV	0.425**	1		
ER	0.400**	0.349**	1	
AAD	0.335**	0.335**	0.286**	1

Note: **p < 0.01; PC=Perceived message clarity, PV=Perceived value, ER=Emotional response, AAD=Advertisement attitude.

To assess the stability of the path coefficients across groups, structural equation modeling was conducted using AMOS, with separate estimations for the full sample, the idiomatic expression group (Group 1), and the colloquial expression group (Group 2).

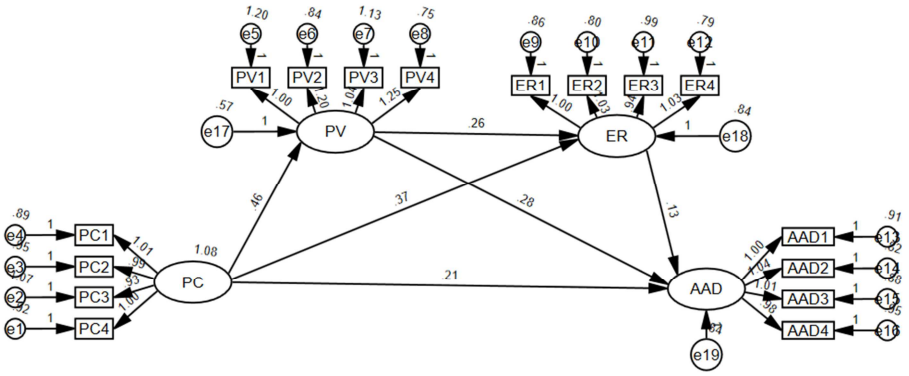

Figure 3 Result of SEM all Samples

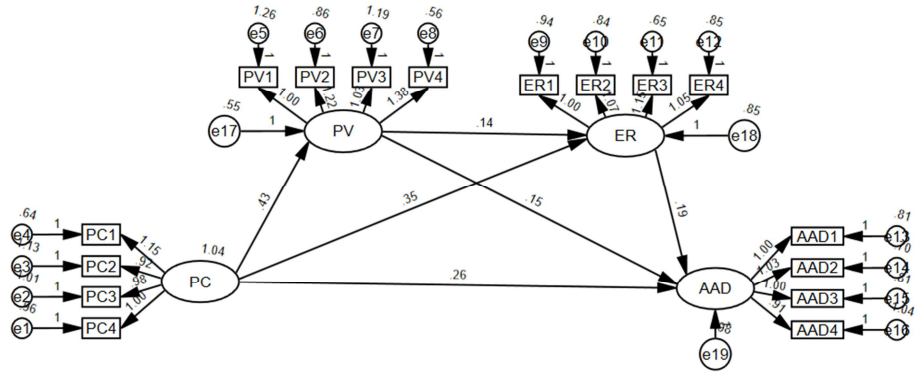

Figure 4 Result of SEM Group Idiomatic Expressions

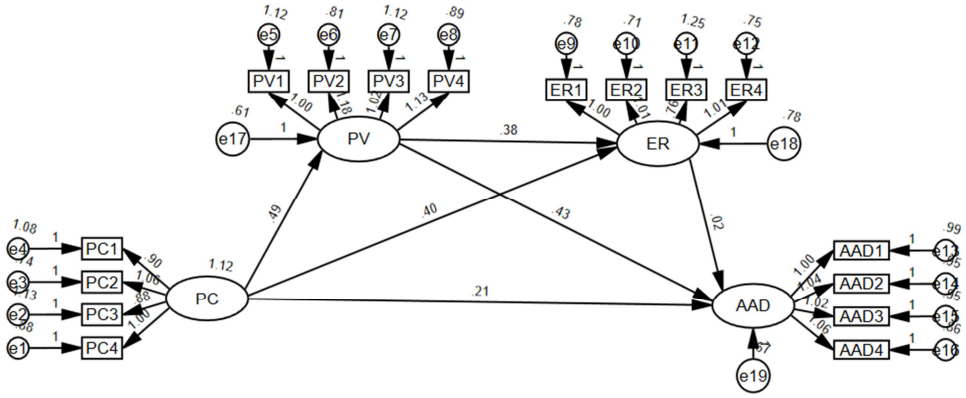

Figure 5 Result of SEM Group Colloquial Expressions

The unconstrained model demonstrated a good fit, with $\chi^2(196) = 238.867$, $\chi^2/df = 1.219$, CFI = 0.986, and RMSEA = 0.021 (90% CI [0.009, 0.030]). After imposing measurement invariance constraints (measurement weights), the model fit remained acceptable, with CFI = 0.982 and RMSEA = 0.023. The change in CFI (ΔCFI = -0.004) was below the recommended threshold of 0.01, indicating that measurement invariance was supported.

Table 5 Measurement Invariance Test Results

Model	χ^2	df	χ^2/df	CFI	RMSEA	RMSEA 90% CI	ΔCFI
Unconstrained	238.867	196	1.219	0.986	0.021	(.009, .030)	—
Measurement weights	263.727	208	1.268	0.982	0.023	(.013, .031)	-0.004
Structural weights	274.068	214	1.281	0.981	0.024	(.014, .032)	-0.005
Structural covariances	274.071	215	1.275	0.981	0.023	(.014, .031)	-0.005
Structural residuals	279.856	218	1.284	0.980	0.024	(.015, .032)	-0.006
Measurement residuals	306.759	234	1.311	0.977	0.025	(.016, .032)	-0.009

The model fit indices are presented in Table 6. As shown in Table 5, all three models demonstrate a good level of fit. Specifically, for Model of full samples, χ^2/df = 1.050, RMSEA = 0.010, CFI = 0.998, and TLI = 0.998. For idiomatic expression group, χ^2/df = 1.299, RMSEA = 0.034, CFI = 0.978, and TLI = 0.982. For colloquial expression group, χ^2/df = 1.139, RMSEA = 0.024, CFI = 0.989, and TLI = 0. 991.The GFI and AGFI values for all models exceed 0.92, while the PNFI and PCFI values are all above 0.68. These results indicate that the model structure is appropriate and that the overall model fit is satisfactory, supporting the suitability of the models for subsequent cross-group comparison of path coefficients.

Table 6 Model Fit Indices for Multi-group SEM

	χ^2/df	RMSEA	GFI	NFI	TLI	CFI	PNFI	PGFI
Model	1.050	0.010	0.975	0.967	0.998	0.998	0.790	0.703
Model 1	1.299	0.034	0.944	0.926	0.978	0.982	0.757	0.680
Model 2	1.139	0.024	0.948	0.931	0.989	0.991	0.761	0.683

The structural path coefficients presented in the model indicate that significant relationships exist in both the full sample and the subgroup analyses. In the full sample, perceived message clarity has a significant positive effect on perceived value (β = 0.461, $p < 0.001$). Perceived value also exerts a significant positive influence on emotional response (β = 0.262, $p < 0.001$), while perceived message clarity has a significant positive effect on emotional response (β = 0.373, $p < 0.001$). In addition, emotional response significantly predicts advertisement attitude (β = 0.130, $p < 0.05$), and both perceived message clarity and perceived value have significant positive effects on advertisement attitude (β = 0.214, $p < 0.01$; β = 0.282, $p < 0.001$).

The results of the multi-group analysis reveal notable differences between the two groups. In the idiomatic expression group, perceived message clarity has significant positive effects on both perceived value (β = 0.431, $p < 0.001$) and emotional response (β = 0.346, $p < 0.001$). Emotional response and perceived message clarity also have significant positive effects on advertisement attitude (β = 0.189, $p < 0.05$; β = 0.261, $p < 0.01$). However, the effects of perceived value on emotional response and advertisement attitude are not statistically significant in this group.

In the colloquial expression group, perceived message clarity has a significant positive effect on perceived value (β = 0.489, $p < 0.001$), and perceived value significantly influences emotional response (β = 0.375, $p < 0.001$). Perceived message clarity also significantly affects emotional response (β = 0.395, $p < 0.001$). Furthermore, perceived value has a significant positive effect on advertisement attitude (β = 0.426, $p < 0.001$), and perceived message clarity also exerts a significant positive influence on advertisement attitude (β = 0.208, $p < 0.05$). However, the effect of emotional response on advertisement attitude is not significant in this group.

Table 7 Standardized Path Coefficients for Multi-group SEM

Path	Model B(β)	Model 1 B(β)	Model 2 B(β)
PC⟶PV	0.461*** (0.536)	0.431*** (0.509)	0.489*** (0.554)
PV⟶ER	0.262*** (0.219)	0.140(0.118)	0.375*** (0.315)
PC⟶ER	0.373*** (0.362)	0.346*** (0.347)	0.395*** (0.376)
ER⟶AAD	0.130* (0.133)	0.189* (0.175)	0.022(0.024)
PC⟶AAD	0.214** (0.214)	0.261** (0.243)	0.208* (0.222)
PV⟶AAD	0.282*** (0.242)	0.154(0.121)	0.426*** (0.400)

Note: *p<0.05; **p<0.01; ***p<0.001; PC=Perceived message clarity, PV=Perceived value, ER=Emotional response, AAD=Advertisement attitude.

Discussion

The results from the full sample indicate that perceived message clarity plays a foundational role in shaping both cognitive and affective responses. Specifically, perceived message clarity significantly influences perceived value and emotional response, which in turn contribute to advertisement attitude. This finding is consistent with recent research emphasizing the importance of message clarity in facilitating information processing and

enhancing persuasive outcomes (So & Liu, 2023). From a cognitive processing perspective, clear messages reduce processing effort and enable individuals to more efficiently evaluate the usefulness of the information, thereby strengthening perceived value and subsequent affective responses. In digital and media-rich environments, clarity has been increasingly identified as a critical determinant of user engagement and evaluation (Sundar, 2020).

The multi-group analysis reveals that the mechanisms through which these variables interact differ substantially between the idiomatic expression group and the colloquial expression group. In the idiomatic expression group, perceived message clarity continues to exert strong direct effects on perceived value and emotional response, and both perceived message clarity and emotional response significantly influence advertisement attitude. In contrast, perceived value does not significantly affect emotional response or advertisement attitude in this group. This pattern suggests that the persuasive effect of idiomatic expressions may rely more heavily on direct cognitive appraisal and culturally embedded meaning rather than on a sequential value to emotion pathway.

This finding can be interpreted in light of the cultural and linguistic characteristics of Chinese idioms. Idioms are typically highly condensed, culturally loaded expressions that often require holistic processing and prior cultural knowledge for full comprehension. As such, their persuasive power may derive less from incremental evaluations of utility and more from the symbolic and aesthetic meanings they convey (Sun et al, 2026). In this sense, idiomatic expressions may activate a form of culturally grounded cognitive processing, where meaning is constructed through shared cultural schemas rather than through explicit evaluative reasoning. However, because constructs such as cultural resonance, cultural appreciation, and aesthetic appreciation were not directly measured in the present study, this interpretation should be regarded as a plausible explanation rather than definitive evidence. This aligns with recent studies suggesting that culturally embedded language forms can trigger deeper cognitive engagement but do not necessarily translate into linear evaluative processes (Zhou et al, 2021). Future studies should directly measure cultural resonance, cultural appreciation, and aesthetic appreciation to further validate this proposed explanation.

The colloquial expression group demonstrates a more structured and sequential pathway. In this group, perceived message clarity significantly influences perceived value, which in turn significantly affects emotional response, and perceived value also directly

influences advertisement attitude. This indicates that colloquial expressions facilitate a more conventional cognitive-affective processing route, where individuals first evaluate the usefulness of the information and then develop emotional reactions and attitudes accordingly. This pattern is consistent with contemporary models of consumer information processing, which emphasize the role of perceived value as a central mediator between cognition and affect (Hassan et al, 2022).

The difference between the two groups suggests that colloquial expressions, due to their simplicity and familiarity, are more easily processed and integrated into a linear evaluative framework. Unlike idiomatic expressions, colloquial language does not require extensive cultural interpretation, allowing individuals to directly assess its relevance and utility. As a result, perceived value plays a more prominent role in shaping both emotional response and advertisement attitude. This finding supports recent research indicating that conversational and natural language styles enhance accessibility and facilitate heuristic processing in advertising contexts (Devos et al, 2024).

Emotional response does not significantly influence advertisement attitude in the colloquial expression group, whereas it does in the idiomatic expression group. This suggests that emotional reactions elicited by colloquial expressions may be relatively weak or transient, and therefore less likely to translate into stable evaluative judgments. In contrast, emotional responses triggered by idiomatic expressions, although not mediated by perceived value, may be more closely associated with cultural resonance and aesthetic appreciation, rather than being directly attributed to these constructs. This distinction highlights the possibility that different types of emotional responses, utilitarian versus culturally symbolic, may have different levels of impact on attitude formation, a distinction that has been increasingly recognized in recent advertising research (Huang & Rust, 2021).

Conclusion and Suggestions

The findings confirm that perceived message clarity plays a fundamental role in shaping both cognitive and affective responses, which in turn influence advertisement attitude. More importantly, the multi-group analysis reveals distinct mechanisms across language types. In the idiomatic expression condition, advertisement attitude is primarily influenced by perceived message clarity and emotional response, reflecting a more direct and culturally grounded processing pathway. In contrast, in the colloquial expression condition, perceived value serves as a key mediator linking perceived message clarity to

both emotional response and advertisement attitude, indicating a more structured cognitive affective process. These results demonstrate that different types of formulaic language activate different psychological mechanisms, highlighting the importance of language style as a critical factor in advertising communication.

Based on the findings, it is suggested that language style should be carefully considered in the design of advertising messages. When the goal is to enhance cultural resonance and emotional engagement, the use of idiomatic expressions may be more effective, as they can directly influence audience perceptions and attitudes through culturally embedded meanings. In contrast, when the objective is to facilitate comprehension and emphasize informational value, colloquial expressions may be more appropriate, as they support a clearer and more accessible cognitive processing pathway. In addition, advertisers should align language style with the target audience's linguistic familiarity and cultural background to maximize communication effectiveness.

This study has several limitations that should be acknowledged. First, the sample consisted exclusively of Chinese university students recruited through convenience sampling, which may limit the generalizability of the findings to other consumer populations. Second, the experimental stimuli were limited to study-abroad advertising materials, and the observed relationships may differ across other advertising contexts or product categories. Third, although the findings suggest that Chinese idiomatic expressions may involve culturally grounded cognitive processing, constructs such as cultural resonance, cultural appreciation, and aesthetic appreciation were not directly measured.

References

Babin, B. J., Darden, W. R. & Griffin, M. (1994). Work and/or Fun: Measuring Hedonic and Utilitarian Shopping Value. *Journal of Consumer Research, 20*(4), 644 – 656.

Chen, W. K., Ling, C. J. & Chen, C. W. (2023). What Affects Users to Click Social Media Ads and Purchase Intention? The Roles of Advertising Value, Emotional Appeal and Credibility. *Asia Pacific journal of marketing and logistics*, *35*(8), 1900 - 1916.

Devos, A., Onofriichuk, I., Fedoryshyna, I., Dubovyk, T. & Buchatska, I. (2024). The Role of Language in the Effectiveness of Social Advertising. *Forum for Linguistic Studies*, *6*(5), 737 – 748.

Hassan, H. K., Quader, M. S. & Aktar, S. (2022). The Role of Perceived Value and Green Consumption Attitude on Purchase Intention of Eco-bag: A Study on Young Consumers. *Jurnal Pengurusan*, *65*, 1 - 14.

Huang, M.-H. & Rust, R. T. (2021). A Strategic Framework for Artificial Intelligence in Marketing. *Journal of the Academy of Marketing Science, 49*(1), 30 – 50.

Liu, T., De Costa, F. & Yasing, M. A. I. (2024). Perceived Usefulness as a Mediating Variable on the Relationship Between Video Quality and Audience Emotional Engagement in Social Media. *Studies in Media and Communication*, *13*(1), 119 - 134.

MacKenzie, S. B., Lutz, R. J. & Belch, G. E. (1986). The Role of Attitude toward the Ad as a Mediator of Advertising Effectiveness: A Test of Competing Explanations. *Journal of Marketing Research, 23*(2), 130 – 143.

Sattorov, A. (2024). Emotional Appeal as a Determinant of Effectiveness in English Advertising Texts: A Linguistic and Cognitive Analysis. *International Journal of Industrial Engineering, Technology & Operations Management*, *2*(2), 71 - 77.

So, J. & Liu, J. (2023). The Role of Audience Favorability in Processing (Un) familiar Messages: a Heuristic-systematic Model Perspective. *Human Communication Research*, *49*(4), 383 - 395.

Sun, J., Wang, H. & Yang, J. (2026). How Influencer Type and Interest Appeals in Green Advertising Drive Pro-Environmental Behavior: The Moderating Role of Attribute Centrality. *Journal of Advertising Research*, 1 - 32.

Sundar, S. S. (2008). The MAIN Model: A Heuristic Approach to Understanding Technology Effects on Credibility in M. J. Metzger & A. J. Flanagin (eds.). *Digital Media, Youth, and Credibility*. MIT Press.

Sundar, S. S. (2020). Rise of Machine Agency: A Framework for Studying the Psychology of Human–AI Interaction (HAII). *Journal of Computer-Mediated Communication, 25*(1), 74 – 88.

Venkatesh, V., Morris, M. G., Davis, G. B. & Davis, F. D. (2003). User Acceptance of Information Technology: Toward a Unified View1. *MIS quarterly*, *27*(3), 425 - 478.

Zhou, C., Dewaele, J. M., Ochs, C. M. & De Leersnyder, J. (2021). The Role of Language and cultural Engagement in Emotional Fit with Culture: an Experiment Comparing Chinese-English Bilinguals to British and Chinese Monolinguals. *Affective Science*, *2*(2), 128 - 141.